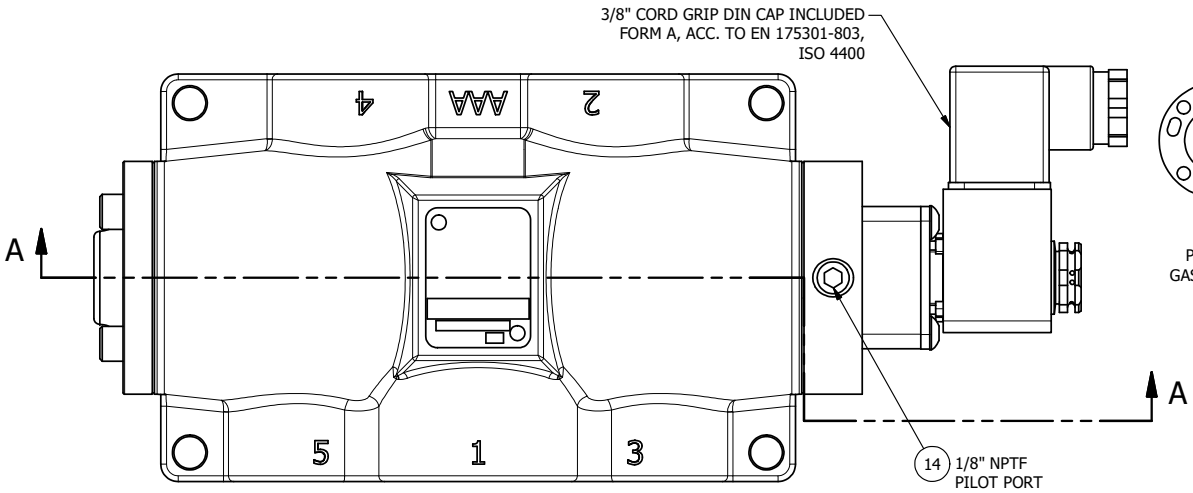


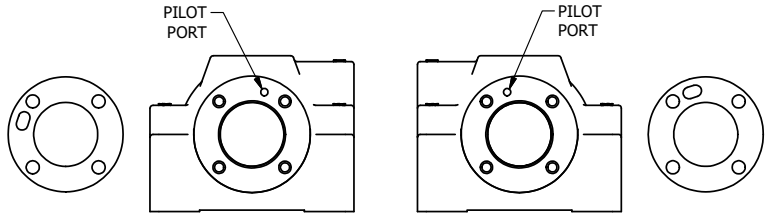


POSITON GASKET ON END OF VALVE SO GASKET COVERS PILOT HOLE, SIDE 'B' ONLY

ALIGN PILOT AND HOLE IN GASKET, SIDE 'A' ONLY FOR EXTERNAL PILOT OPERATION - ROTATE THE ROUND ALUMINUM ADAPTOR 180 DEGREES. REMOVE 1/8" NPTF PLUG AND SUPPLY 50-150 PSI TO 1/8" NPTF PILOT PORT IN ADAPTOR.

NOTES:
1) ALWAYS GIVE VALVE MODEL AND PART NUMBER WHEN ORDERING PARTS.

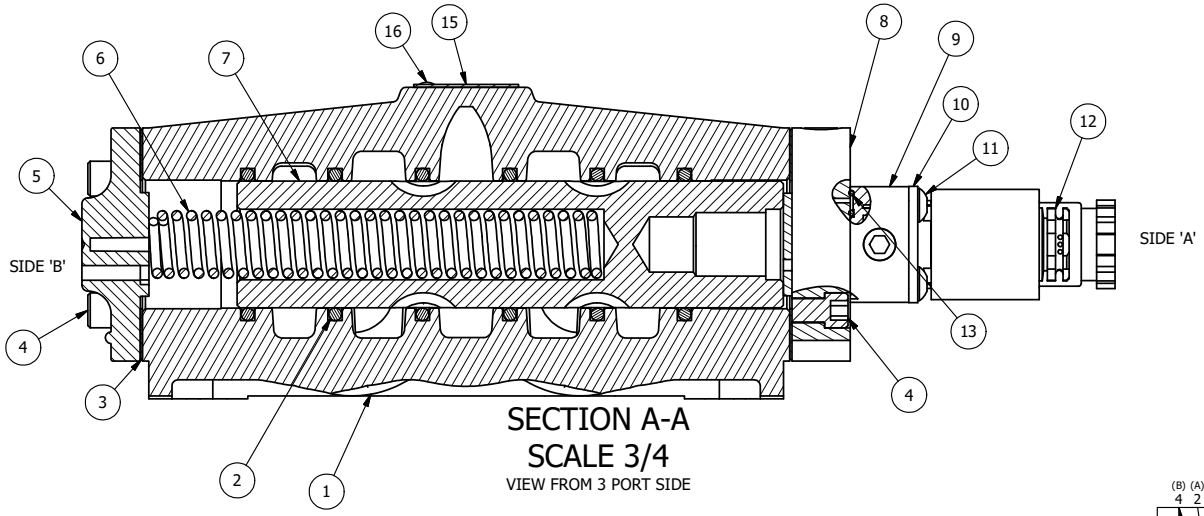


SECTION A-A
SCALE 3/4
VIEW FROM 3 PORT SIDE

| FLG | QTY | PART NO | DESCRIPTION |
|---|---|---|---|
| 16 | 2 | V-212 | SCREW, #2 X 3/16 DRIVE, TYPE U, OVAL HEAD, STAINLESS STEEL |
| 15 | 1 | AN-114 | NAMEPLATE, BLANK, FOR VALVES WITH SPRINGS OR DETENTS |
| 14 | 1 | V-19 | PLUG, SOCKET PIPE 1/8" NPT (#601-3 PITTSBURG PLUG PART #.) |
| 13 | 1 | EMG3 | GASKET - END MOUNT SOLENOID, BUNA-N, 1/4" & 3/8" VALVES |
| 12 | 1 | V-562 | NUT, SOLENOID, SIDE EXHAUST |
| 11 | 4 | V-584 | SCREW, 10-24 X 1, BUTTON HEAD SOCKET CAP WITH MICROSPHERE APPLIED TO THREADS. |
| 10 | 1 | SEC3-7 | PLATE, RE-INFORCEMENT, SOLENOID, STAMPED, 304 STAINLESS |
| 9 | 1 | V-564 | SYSTEM 8 INTRINSICALLY SAFE SOLENOID OPERATOR. |
| 8 | 1 | SSA48-1E | ADAPTOR, END MNT SOLENOID, 1/2", 3/4" & 1" VALVE |
| 7 | 1 | S8 | SPOOL - STANDARD, 2 POS, CLSD CTR, 3/4" & 1" VALVE |
| 6 | 1 | CS8 | SPRING - RETURN, 3/4" & 1" VALVES |
| 5 | 1 | PEC48-3 | END CAP, VENTED, 380 AL, 1/2", 3/4" & 1" VALVES |
| 4 | 8 | V-46 | SCREW, 1/4-20 X 3/4, SOCKET HEAD CAP |
| 3 | 2 | ECG48 | GASKET - END CAP, 1/2", 3/4" & 1" VALVE |
| 2 | 6 | V-30 | O-RING, BUNA-N, 70 DURO, AS-220, (REF 1-3/8 X 1-5/8 X 1/8), 3/4" & 1" VALVES |
| 1 | 1 | B6-1 | BODY, 3/4" SIDE PORT, UPPER PILOTS, ANODIZED |

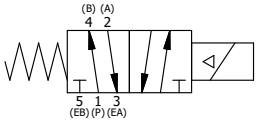


| | | |
|---|---|---|
| LIMITS ON DIMENSIONS UNLESS OTHERWISE SPECIFIED | 2-PL DECIMAL ± .01<br>3-PL DECIMAL ± .005<br>FRACTIONAL ± 1/64<br>ANGULAR ± 1/2' | AAA PRODUCTS INTERNATIONAL<br>**AAA PRODUCTS INTERNATIONAL**<br>**7114 Harry Hines Blvd**<br>**Dallas, TX 75235** |
| DRAWN: RMcKenna | DATE: 3/19/2016 | CHECKED: KWaite DATE: 3/19/2016 |
| SCALE: 1 : 1 | SHEET: 1 OF 1 | RELEASED: HWomack DATE: 3/19/2016 |
| TITLE: 3/4" SIDE PORT, SNGL SOL, 2 POS, SPR RTRN, INTRINSICALLY SAFE, 24VDC, SIDE VENT | PART NO.: ESO6AC 24VDC | REV.: |

THE INFORMATION CONTAINED WITHIN THIS DOCUMENT IS PROPRIETARY TO AAA PRODUCTS AND MAY NOT BE DISCLOSED WITHOUT PRIOR WRITTEN CONSENT

D:\Engineering\Product\Valve\Assembly\Standard\SO\DWG\ESO6AC 24VDC.dw